ELEK R

ble outlet with brush seal Ø60 mm

- Material: Zamak
- Height: 12 or 21 mm
- 6 different finishes
- Easy open and close function of the lid through rotation

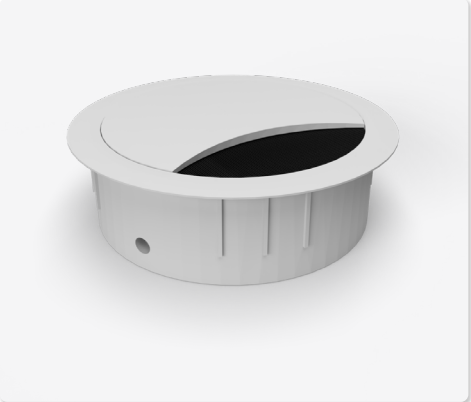

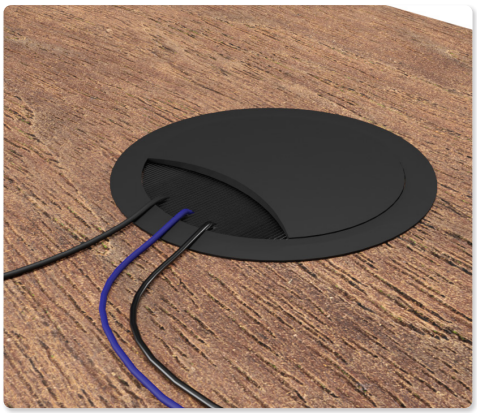

Surface selection

White

White aluminium

Black

Stainless steel finish

Chrome polished

Chrome matt

Technical Drawings

Top / 3D View

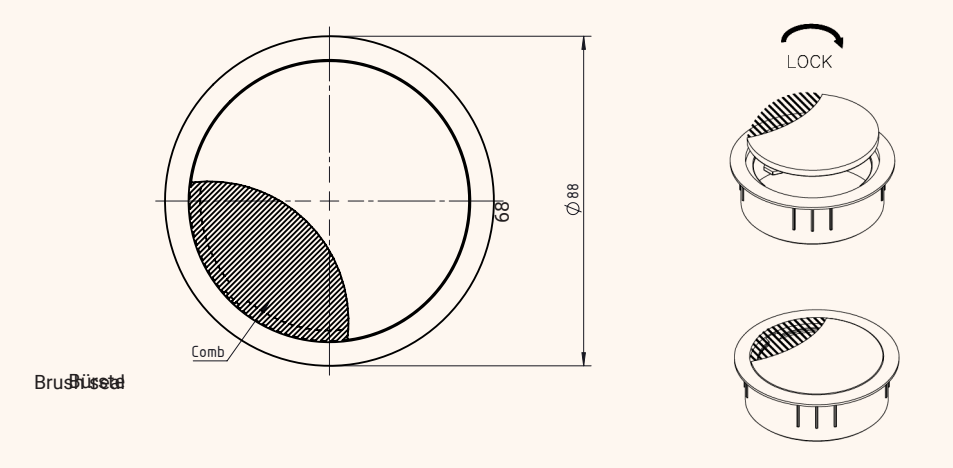

Side

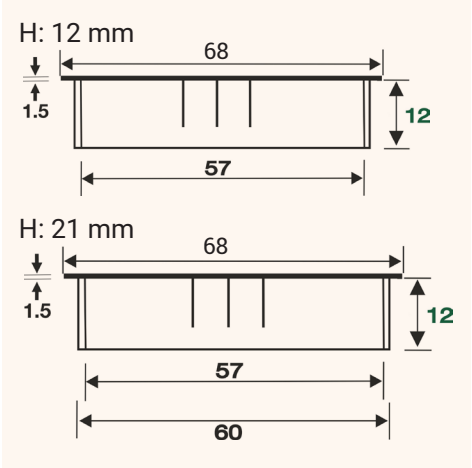

Article	Description	Colour	Item No.
ELEK R	Cable outlet with Ø60 mm, H: 12 mm, Material: Zamak	Chrome matt	201 105411
		Chrome polished	201 105509
		Stainless steel finish	201 105838
		Black	201 105341
		White	201 105971
		similar White aluminium-RAL 9006	201 105530
ELEK R	Cable outlet with Ø60 mm, H: 21 mm, Material: Zamak	Chrome matt	201 105390
		Chrome polished	201 105691
		Stainless steel finish	201 105292
		Black	201 105187
		White	201 105236
		similar White aluminium-RAL9006	201 105705

ELEK R

ble outlet with brush seal Ø80 mm

- Material: Zamak
- Height: 12 or 21 mm
- 6 different finishes
- Easy open and close function of the lid through rotation

12

96

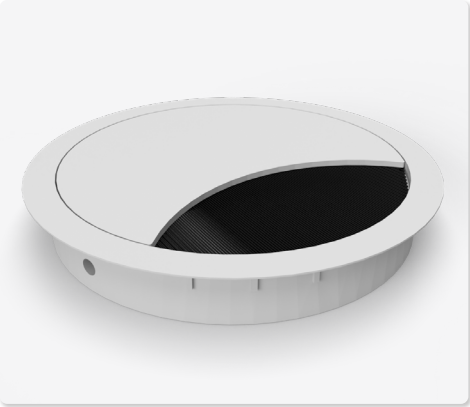

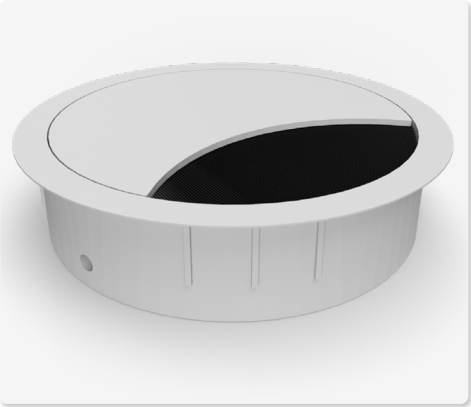

Surface selection

Technical Drawings

Top / 3D View

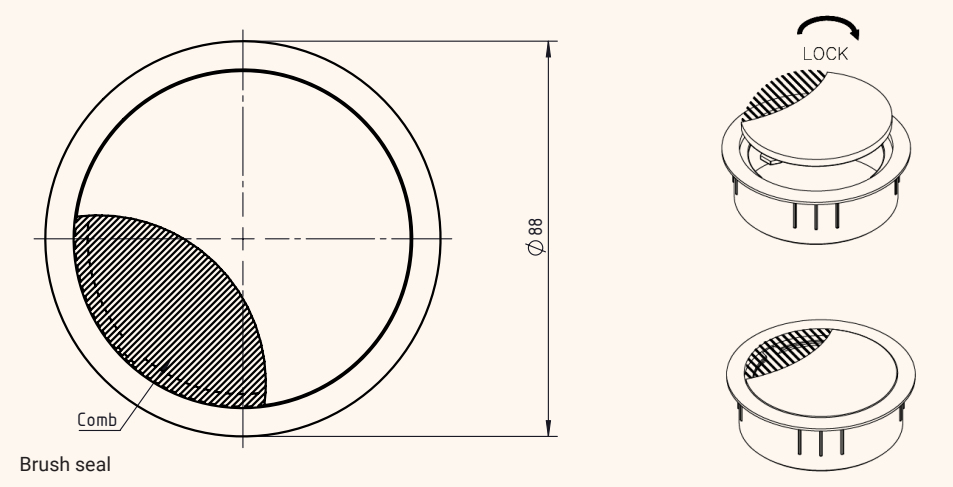

Side

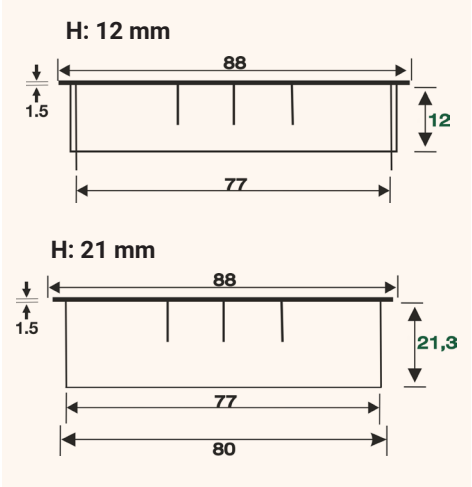

Article	Description	Colour	Item No.
ELEK R	Cable outlet with Ø80 mm, H: 12 mm, Material: Zamak	Chrome matt	201 106363
		Chrome polished	201 105628
		Stainless steel finish	201 105908
		Black	201 105166
		White	201 105901
		White aluminium-RAL 9006	201 105285
ELEK R	Cable outlet with Ø80 mm, H: 21 mm, Material: Zamak	Chrome matt	201 105719
		Chrome polished	201 106265
		Stainless steel finish	201 106055
		Black	201 105859
		White	201 106167
		White aluminium-RAL 9006	201 105936
		Titanium	201 128602
		Anthrazit	201 128609